English

Safety Notes

Explanation of symbols

Read instruction manual.

Do not use the machine in the rain or leave it outdoors when it is raining.

Remove battery before adjusting or cleaning, and before leaving the machine unattended for any period.

General Power Tool Safety Warnings

⚠ WARNING **Read all safety warnings and all instructions.** Failure to follow the warnings and instructions may result in electric shock, fire and/or serious injury.

Save all warnings and instructions for future reference.

The term "power tool" in the warnings refers to your mains-operated (corded) power tool or battery-operated (cordless) power tool.

Work area safety

- **Keep work area clean and well lit.** Cluttered or dark areas invite accidents.
- **Do not operate power tools in explosive atmospheres, such as in the presence of flammable liquids, gases or dust.** Power tools create sparks which may ignite the dust or fumes.
- **Keep children and bystanders away while operating a power tool.** Distractions can cause you to lose control.

Electrical safety

- **Power tool plugs must match the outlet. Never modify the plug in any way. Do not use any adapter plugs with earthed (grounded) power tools.** Unmodified plugs and matching outlets will reduce risk of electric shock.
- **Avoid body contact with earthed or grounded surfaces, such as pipes, radiators, ranges and refrigerators.** There is an increased risk of electric shock if your body is earthed or grounded.
- **Do not expose power tools to rain or wet conditions.** Water entering a power tool will increase the risk of electric shock.
- **Do not abuse the cord. Never use the cord for carrying, pulling or unplugging the power tool. Keep cord away from heat, oil, sharp edges or moving parts.** Damaged or entangled cords increase the risk of electric shock.
- **When operating a power tool outdoors, use an extension cord suitable for outdoor use.** Use of a cord suitable for outdoor use reduces the risk of electric shock..
- **If operating a power tool in a damp location is unavoidable, use a residual current device (RCD) protected supply.** Use of an RCD reduces the risk of electric shock.

Personal safety

- **Stay alert, watch what you are doing and use common sense when operating a power tool. Do not use a power tool while you are tired or under the influence of drugs, alcohol or medication.** A moment of inattention while operating power tools may result in serious personal injury.
- **Use personal protective equipment. Always wear eye protection.** Protective equipment such as dust mask, non-skid safety shoes, hard hat, or hearing protection used for appropriate conditions will reduce personal injuries.
- **Prevent unintentional starting. Ensure the switch is in the off-position before connecting to power source and/or battery pack, picking up or carrying the tool.** Carrying power tools with your finger on the switch or energising power tools that have the switch on invites accidents.
- **Remove any adjusting key or wrench before turning the power tool on.** A wrench or a key left attached to a rotating part of the power tool may result in personal injury.
- **Do not overreach. Keep proper footing and balance at all times.** This enables better control of the power tool in unexpected situations.
- **Dress properly. Do not wear loose clothing or jewellery. Keep your hair, clothing and gloves away from moving parts.** Loose clothes, jewellery or long hair can be caught in moving parts.
- **If devices are provided for the connection of dust extraction and collection facilities, ensure these are connected and properly used.** Use of dust collection can reduce dust-related hazards.

Power tool use and care

- **Do not force the power tool. Use the correct power tool for your application.** The correct power tool will do the job better and safer at the rate for which it was designed.
- **Do not use the power tool if the switch does not turn it on and off.** Any power tool that cannot be controlled with the switch is dangerous and must be repaired.
- **Disconnect the plug from the power source and/or the battery pack from the power tool before making any adjustments, changing accessories, or storing power tools.** Such preventive safety measures reduce the risk of starting the power tool accidentally.
- **Store idle power tools out of the reach of children and do not allow persons unfamiliar with the power tool or**

these instructions to operate the power tool. Power tools are dangerous in the hands of untrained users.

- **Maintain power tools. Check for misalignment or binding of moving parts, breakage of parts and any other condition that may affect the power tool's operation. If damaged, have the power tool repaired before use.** Many accidents are caused by poorly maintained power tools.
- **Keep cutting tools sharp and clean.** Properly maintained cutting tools with sharp cutting edges are less likely to bind and are easier to control.
- **Use the power tool, accessories and tool bits etc. in accordance with these instructions, taking into account the working conditions and the work to be performed.** Use of the power tool for operations different from those intended could result in a hazardous situation.

Battery tool use and care

- **Recharge only with the charger specified by the manufacturer.** A charger that is suitable for one type of battery pack may create a risk of fire when used with another battery pack.
- **Use power tools only with specifically designated battery packs.** Use of any other battery packs may create a risk of injury and fire.
- **When battery pack is not in use, keep it away from other metal objects, like paper clips, coins, keys, nails, screws or other small metal objects, that can make a connection from one terminal to another.** Shorting the battery terminals together may cause burns or a fire.
- **Under abusive conditions, liquid may be ejected from the battery; avoid contact. If contact accidentally occurs, flush with water. If liquid contacts eyes, additionally seek medical help.** Liquid ejected from the battery may cause irritation or burns.

Service

- **Have your power tool serviced by a qualified repair person using only identical replacement parts.** This will ensure that the safety of the power tool is maintained.

Hedge trimmer safety warnings

- **Keep all parts of the body away from the cutter blade. Do not remove cut material or hold material to be cut when blades are moving. Make sure the switch is off when clearing jammed material.** A moment of inattention while operating the hedge trimmer may result in serious personal injury.
- **Carry the hedge trimmer by the handle with the cutter blade stopped. When transporting or storing the hedge trimmer always fit the cutting device cover.** Proper handling of the hedge trimmer will reduce possible personal injury from the cutter blades.
- **Hold the power tool by insulated gripping surfaces only, because the cutter blade may contact hidden wiring.** Cutter blades contacting a "live" wire may make exposed metal parts of the power tool "live" and could give the operator an electric shock.

Additional safety warnings

- This tool is not intended for use by persons (including children) with reduced physical, sensory or mental capabilities, or lack of experience and knowledge, unless they have been given supervision or instruction concerning use of the appliance by a person responsible for their safety.
  Children should be supervised to ensure that they do not play with the appliance.
- **When working with the machine, always hold it firmly with both hands and provide for a secure stance.** The power tool is guided more secure with both hands.
- **Always ensure all handles and guards are fitted when using the machine.** Never attempt to use an incomplete machine or one fitted with an unauthorized modification.
- **Always lubricate the cutting blade with protective spray before use.**
- **Always wait until the machine has come to a complete stop before placing it down.**
- Other persons and animals should remain at a distance of 3 metres or more when the machine is being used. The operator is responsible for third persons in the working area.
- Never grasp the blade of the hedgecutter.
- Children or persons unfamiliar with these instructions must not operate the hedgecutter. Local regulations may restrict the age of the operator.
- Never cut a hedge while people, especially children or pets, are nearby.
- The user is responsible for accidents or hazards occurring to other people or their property.
- Do not operate the hedgecutter when barefoot or wearing open sandals, always wear substantial footwear and long trousers. The use of sturdy gloves, non-skid footwear and safety glasses is recommended. Do not wear loose clothing or jewellery which can be caught in moving parts.
- Thoroughly inspect the area where the hedge trimmer is to be used and remove all wires and other foreign objects.
- Prior to operation, check cutter blades, blade bolts and cutter assembly for wear or damage. Do not operate with a damaged or excessively worn cutting device.
- Know how to stop the hedge trimmer quickly in an emergency.
- Cut a hedge only in daylight or in good artificial light.
- Never operate the hedgecutter with defective guards or without the guard in place.
- Always ensure all handles and guards supplied are fitted when using the hedgecutter. Never attempt to use an incomplete hedgecutter or one with an unauthorised modification.
- Never hold the hedgecutter by the guard.

- While operating the hedgecutter always be sure of a safe and secure operating position at all times, especially when using steps or a ladder.
- Always be aware of your surroundings and stay alert for possible hazards that you may not hear whilst operating the hedgecutter.
- Keep all nuts, bolts and screws tight to ensure that the hedgecutter is always in a safe working condition.
- The hedgecutter should be stored in a dry, high or locked up place out of the reach of children.
- Replace worn or damaged parts for safety.
- Do not attempt to repair the machine unless you are qualified to do so.
- Ensure replacement parts fitted are Bosch-approved.
- To safeguard against contact with the moving cutter blade, this hedge trimmer is constructed with two handles each with a blade control (switch). To operate the hedge cutter, both controls must be actuated simultaneously. **Do not use the tool, if it runs without a switch being actuated or just one switch being actuated.**

Recommendations for Optimal Handling of the Battery Pack

- **Do not open the battery.** There is a risk of short-circuiting.

Protect the battery against heat (e.g., against continuous intense sunlight), fire, water, and moisture. There is a risk of explosion.

- **In case of damage and improper use of the battery pack, vapours may be emitted.** Ventilate the area and seek medical help in case of complaints. The vapours can irritate the respiratory system.
- **Only use the battery with products from the manufacturer.** This is the only way in which you can protect the battery against dangerous overload.
- **The battery can be damaged by pointed objects such as nails or screwdrivers or by force applied externally.** An internal short circuit may occur, causing the battery to burn, smoke, explode or overheat.
- **Do not short-circuit the battery**. There is a risk of explosion.
- Occasionally clean the venting slots of the battery using a soft, clean and dry brush.

Safety Warnings for Battery Chargers

Read all safety warnings and all instructions. Failure to follow the safety warnings and instructions may result in electric shock, fire and/or serious injury.

Save all safety warnings and instructions for future reference.

Use the battery charger only when you fully understand and can perform all functions without limitation, or have received appropriate instructions.

- Never allow children, persons with physical, sensory or mental limitations or a lack of experience and/or knowledge and/or people unfamiliar with these instructions to use the battery charger. Local regulations may restrict the age of the operator.
- **Supervise children at all times.** This will ensure that children do not play with the battery charger.
- Charge only Bosch lithium-ion batteries with a capacity above **1.5** Ah (**5** battery cells or more). The battery voltage must match the battery charging voltage of the charger. Do not charge non-rechargeable batteries. Otherwise there is a danger of fire and explosion.

Keep the battery charger away from rain or moisture. Penetration of water in the battery charger increases the risk of an electric shock.

- **Keep the charger clean.** Dirt poses a risk of electric shock.
- **Always check the charger, cable and plug before use. Stop using the charger if you discover any damage. Do not open the charger yourself, and have it repaired only by a qualified specialist using only original replacement parts.** Damaged chargers, cables and plugs increase the risk of electric shock.
- **Do not operate the charger on an easily ignited surface (e.g. paper, textiles, etc.) or in a flammable environment.** There is a risk of fire due to the charger heating up during operation.
- **Do not cover the ventilation slots of the battery charger.** Otherwise, the battery charger can overheat and no longer operate properly.
- For increased electrical safety, we recommend using a residual current device with a max. tripping current of 30 mA. Before using, always check your residual current device.

Symbols

The following symbols are important for reading and understanding the original instructions. Please take note of the symbols and their meaning. The correct interpretation of the symbols will help you to use the product in a better and safer manner.

Symbol	Meaning
	Wear protective gloves
	Wear safety glasses/goggles
	Movement direction
	Reaction direction
	Weight
	Switching On
	Switching Off
CLICK!	Audible noise
	Prohibited action
	Accessories/Spare Parts

Intended Use

The machine is intended for cutting and trimming hedges and bushes in domestic use.

Product Features (see figure A)

The numbering of the product features refers to the illustration of the product on the graphics pages.

(1) Handle (insulated gripping surface)
(2) On/Off switch
(3) Lock-off button for On/Off switch
(4) Hand guard
(5) Blade
(6) Protection sleeve
(7) Charger
(8) Battery unlocking button
(9) Battery

The accessories illustrated or described are not included as standard delivery. A complete overview of accessories can be found in our accessories program.

Technical Data

Cordless hedge trimmer		EasyHedgeCut 18-45
Article number		**3 600 H49 H..**
No-load stroke rate	min^{-1}	2400
Cutting length	mm	450
Tooth opening	mm	15
Weight according to EPTA-Procedure 01:2014	kg	2.3
Serial number		see type plate on the garden product
Permitted ambient temperature		
– during charging	°C	0 ... +35
– during operation and storage	°C	-20 ... +40
Battery		**Li-Ion**
Rated voltage	V	18
Article number/Capacity		
– 2 607 337 187	Ah	1.5
– 2 607 337 211	Ah	2.0
– 2 607 337 199	Ah	2.5
– 1 607 A35 01M	Ah	3.0
– 1 607 A35 07H	Ah	4.0

Cordless hedge trimmer		EasyHedgeCut 18-45
– 1 607 A35 01Y	Ah	6.0
Number of battery cells		
– 2 607 337 187		5
– 2 607 337 211		5
– 2 607 337 199		5
– 1 607 A35 01M		5
– 1 607 A35 07H		10
– 1 607 A35 01Y		10

Charger		AL 1810 CV	AL 1815 CV	AL 1830 CV	AL 1880 CV
Article number					
	EU	2 607 226 385	2 607 226 077	2 607 225 965	2 607 226 177
	UK	2 607 226 387	2 607 226 079	2 607 225 967	2 607 226 179
Charging current	A	1.0	1.5	3.0	8.0
Charging period (battery discharged)					
– Battery with 1.5 Ah	min	94	63	33	27
– Battery with 2.0 Ah	min	124	84	45	30
– Battery with 2.5 Ah	min	154	105	60	36
– Battery with 3.0 Ah	min	185	130	72	46
– Battery with 4.0 Ah	min	244	168	95	35
– Battery with 6.0 Ah	min	364	260	130	62
Weight according to EPTA-Procedure 01:2014	kg	0.17	0.38	0.40	0.60
Protection class		⧈/ II	⧈/ II	⧈/ II	⧈/ II

The specifications apply to a rated voltage [U] of 230 V. These specifications may vary at different voltages and in country-specific models.

Noise/Vibration Information

		3 600 H49 H..
Noise emission values determined according to **EN 60745-2-15**.		
Typically the A-weighted noise levels of the product are:		
– Sound pressure level	dB(A)	**62**
– Sound power level	dB(A)	**82**
– Uncertainty K	dB	**3.0**
Vibration total values ah (triax vector sum) and uncertainty K determined according to **EN 60745-2-15**		
– Vibration emission value a_h	m/s^2	**2.5**
– Uncertainty K	m/s^2	**1.5**

The vibration level given in these instructions has been measured in accordance with a standardised measuring procedure and may be used to compare power tools. It can also be used for a preliminary estimation of exposure to vibration.

The stated vibration level applies to the main applications of the power tool. However, if the power tool is used for different applications, with different application tools or poorly maintained, the vibration level may differ. This can significantly increase the exposure to vibration over the total working period.

To estimate the exposure to vibration accurately, the times when the tool is switched off or when it is running but not actually being used should also be taken into account. This can significantly reduce the exposure to vibration over the total working period.

Implement additional safety measures to protect the operator from the effects of vibration, such as servicing the

power tool and application tools, keeping the hands warm, and organising workflows correctly.

Switching on

For Your Safety

- ▶ **Caution: Switch garden tool off and remove battery from machine before adjusting or cleaning.**
- ▶ **The blades continue to move for a fraction of a second after the hedgecutter is switched off.**
- ▶ **Do not touch the moving blades.**

Charging the Battery

The battery is equipped with temperature monitoring that allows charging only in the temperature range between 0 °C and 35 °C. In this manner, a high battery service life is achieved.

Note: The battery is supplied partially charged. To ensure full battery capacity, completely charge the battery in the battery charger before using for the first time.

The lithium-ion battery can be charged at any time without reducing its service life. Interrupting the charging procedure does not damage the battery.

The "Electronic Cell Protection (ECP)" protects the lithium-ion battery against deep discharging. When the battery is discharged, the machine is switched off by means of a protective circuit: The garden product no longer operates.

Do not continue to press the On/Off switch after an automatic shut-off of the machine. The battery can be damaged.

Observe the notes for disposal of the battery.

- ▶ **Pay attention to the mains voltage.** The voltage of the power source must match the voltage specified on the rating plate of the charger.

Inserting/Removing the Battery (see figure B)

Note: Using unsuitable batteries can lead to malfunctions or damage the machine.

Insert the charged battery **(9)**. Ensure the battery is inserted correctly.

To remove the battery **(9)** from the machine, press the battery unlocking button **(8)** and pull the battery out.

Charging Procedure

The charging procedure starts as soon as the mains plug of the charger is plugged into a socket outlet and the battery **(6)** is inserted onto the charger **(10)**.

Due to the intelligent charging method, the charging condition of the battery is automatically detected and the battery is charged with the optimum charging current, depending on battery temperature and voltage.

This gives longer life to the battery and always leaves it fully charged when kept in the charger for storage.

Understanding the Indicators (AL 1815 CV)

Flashing battery charge indicator

Charge The charging process is indicated by the **flashing** of the battery charge indicator .

Continuous lighting of the battery charge indicator

Full **Continuous lighting** of the battery charge indicator indicates that the battery is fully charged or that the temperature of the battery is not within the allowable charging temperature range, and cannot be charged for this reason. The battery is charged as soon as the allowable charging temperature range is reached.

When the battery is not inserted, **continuous lighting** of the battery charge indicator indicates that the mains plug is inserted in the socket outlet and that the battery charger is ready for operation.

Meaning of the Indication Elements (AL 1830 CV/AL 1880 CV)

(Fast) Flashing of the Green Battery Charge Indicator

Charge The rapid-charging procedure is indicated by **fast flashing** of the **green** battery charge indicator .

Note: The rapid-charging procedure is only possible when the battery temperature is within the allowable charging temperature range, see section "Technical Data".

(Slow) Flashing of the Green Battery Charge Indicator

GO 80% When the charging condition of the battery is 80%, the **green** battery charge indicator **flashes slowly**.

The battery can be removed for immediate use.

Continuous Lighting of the Green Battery Charge Indicator

Full **Continuous lighting** of the **green** battery charge indicator indicates that the battery is fully charged.

When the battery is not inserted, **continuous lighting** of the battery charge indicator indicates that the mains plug is inserted in the socket outlet and that the battery charger is ready for operation.

Continuous Lighting of the Red Battery Charge Indicator

Continuous lighting of the **red** battery charge indicator indicates that the temperature of the battery is not within the allowable charging temperature range, see section "Technical Data". As soon as the allowable charging temperature range is reached, the battery charger automatically switches to rapid charging.

Flashing Red Battery Charge Indicator

A **flashing red** battery charge indicator indicates a different malfunction of the charging procedure, see section "Troubleshooting – Causes and Corrective Measures".

Operation

Switching ON/OFF (see figures C and D)

To **switch ON,** firstly press and hold the lock-off button for On/Off switch **(3)**. Then press the On/Off switch **(2)** and keep it pressed.

To **switch OFF,** release the lock-off button for On/Off switch **(3)** and then release the On/Off switch **(2)**.

Sawing Function

Although the tooth opening allows wood to be cut up to Ø 20 mm, the tip of the blade is designed to cut wood up to Ø 25 mm.

Working with the Hedgecutter (see figure E)

Move the hedgecutter evenly forward along the cutting line. The double edge cutting blade enables cutting in either direction, or with a side to side motion.

Cut the sides of the hedge first, then the top.

To cut the sides straightly, we recommend cutting from bottom to top in the direction of growth. Younger stems tend to move outwards when cutting them from top to bottom, resulting in shallow patches or holes in the hedge.

To reach a level finish, fasten a piece of string along the length of the hedge at the required height and use as an alignment guide. Cut the hedge just above the string.

Pay attention that no objects such as wires are cut. The blade or drive can be damaged.

Anti Blocking

If the blade stalls on a tough material, the load of the motor increases. The intelligent micro-electronics senses this overload condition and repeatedly reverses the motor, in order to prevent stalling and to cut the branch through.

This audible reversing cut action continues for up to 3 s.

After cutting through, the garden product continues in its normal mode, or in case the overload condition continues the blades automatically stop in the open position (e.g. in case a piece of metal fence accidentally blocks the garden product).

Troubleshooting

Hedgecutter

Problem	Possible Cause	Corrective Action
Hedgecutter does not operate	Battery discharged	Recharge battery; also see “Battery Charging”
	Battery not fully connected	Ensure both locking levels are engaged
Hedgecutter operates intermittently	Internal wiring of garden tool defective	Contact Service Agent
	On/Off switch defective	Contact Service Agent
	Motor reverses repeatedly then stops after 3 s.	see “Working Advice” (Anti Blocking)
Motor runs but blades remain stationary	Internal Error	Contact Service Agent
Cutting blade hot	Cutting blade blunt	Have blade sharpened
	Cutting blade has dents	Have blade inspected/overhauled
	Too much friction, due to lack of lubricant	Apply lubricant spray
Blade will not move	Battery discharged	Recharge battery; also see “Battery Charging”
	Machine defective	Contact Service Agent
Excessive vibrations/ noise	Machine defective	Contact Service Agent
Cutting time per battery charge too low	Too much friction, due to lack of lubricant	Apply lubricant spray
	Blade needs cleaning	Clean blade
	Poor cutting technique	see “Working Advice” (figure **E**)
	Battery not fully charged	Recharge battery; also see “Battery Charging”
The blades are running slow or the anti blocking feature is not functioning	Battery discharged	Recharge battery; also see “Battery Charging”
	Battery stored outside of battery temperature	Allow battery to warm naturally to room temperature (within battery operating temperature 0–35 °C)

Battery and charger

Problem	Possible Cause	Corrective Action
Flashing red battery charge indicator No charging procedure possible	Battery not (properly) inserted	Properly insert battery in charger
	Battery contacts contaminated	Clean the battery contacts (e. g. by inserting and removing the battery several times) or replace the battery
	Battery defective	Replace the battery
Battery charge indicators do not light up	Mains plug of battery charger not plugged in (properly)	Insert mains plug (fully) into the socket outlet
	Socket outlet, mains cable or battery charger defective	Check the mains voltage; have the battery charger checked by an authorised after-sales service agent for Bosch power tools

Maintenance and Service

- ▶ **Before any work on the garden product itself (e. g. maintenance, tool change, etc.) as well as during transport and storage, remove the battery from the garden product.** There is danger of injury when unintentionally actuating the On/Off switch.

Maintenance, Cleaning and Storage (see figure F)

- ▶ **For safe and proper working, always keep the product clean.**

For safe and proper working, always keep the garden tool and the ventilation slots clean.

Never spray the garden tool with water.

Never immerse the garden tool in water.

Store the garden product in a secure, dry place, out of the reach of children.

Do not place other objects on the garden product.

Battery Maintenance

Use the following procedures to enable optimum usage of the battery:

- Protect the battery against moisture and water.
- Store the machine and battery only within a temperature range between –20 °C and 50 °C . As an example, do not leave the battery in the car in summer.
- It is recommended that the battery is not stored within the product but stored separately.
- Do not leave the battery in the product in direct sunlight.
- The ideal storage condition for the battery is 5 °C.
- Occasionally clean the venting slots of the battery using a soft, clean and dry brush.

A significantly reduced working period after charging indicates that the battery is used and must be replaced.

After-sales Service and Application Service

www.bosch-garden.com

In all correspondence and spare parts orders, please always include the 10-digit article number given on the nameplate of the product.

Great Britain

Robert Bosch Ltd. (B.S.C.)
P.O. Box 98
Broadwater Park
North Orbital Road
Denham Uxbridge
UB 9 5HJ
At www.bosch-pt.co.uk you can order spare parts or arrange the collection of a product in need of servicing or repair.
Tel. Service: (0344) 7360109
E-Mail: boschservicecentre@bosch.com

Ireland

Origo Ltd.
Unit 23 Magna Drive
Magna Business Park
City West
Dublin 24
Tel. Service: (01) 4666700
Fax: (01) 4666888

Australia, New Zealand and Pacific Islands

Robert Bosch Australia Pty. Ltd.
Power Tools
Locked Bag 66
Clayton South VIC 3169
Customer Contact Center
Inside Australia:
Phone: (01300) 307044
Fax: (01300) 307045
Inside New Zealand:
Phone: (0800) 543353
Fax: (0800) 428570
Outside AU and NZ:
Phone: +61 3 95415555
www.bosch-pt.com.au
www.bosch-pt.co.nz

Republic of South Africa

Customer service
Hotline: (011) 6519600

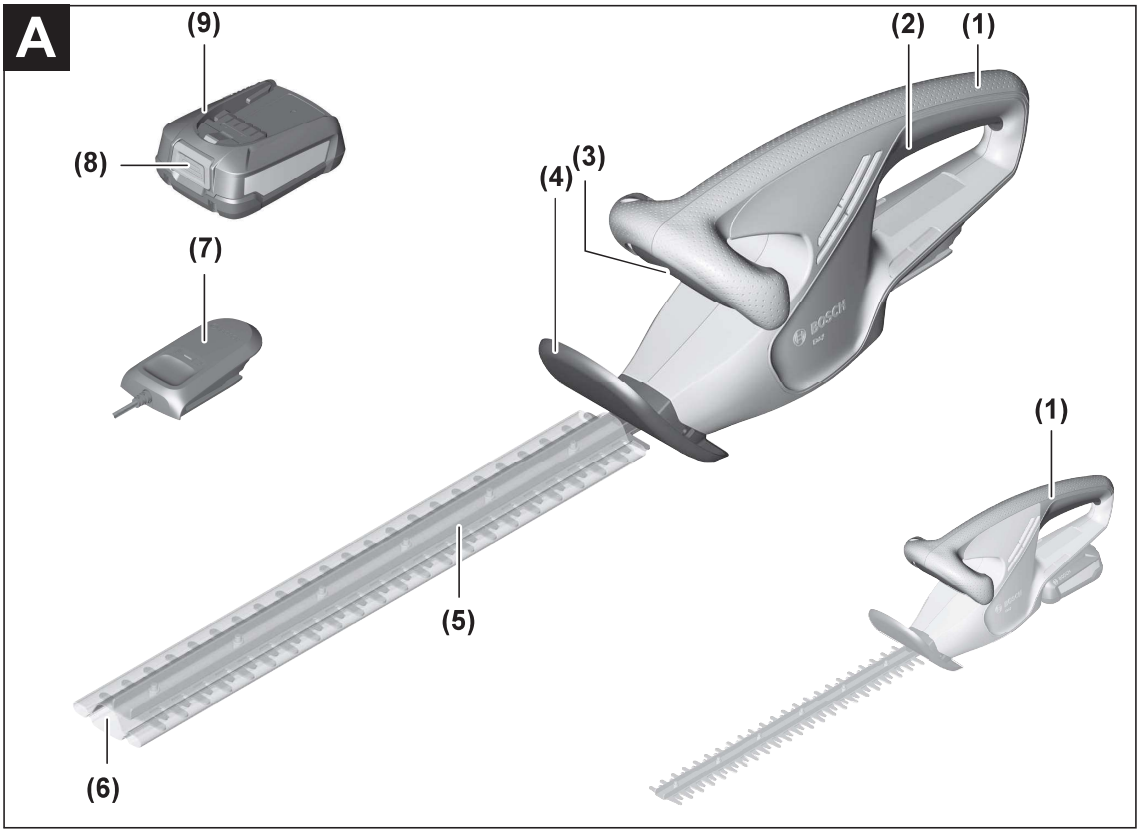
A
(9)
(8)
(7)
(2)
(1)
(4)
(3)
(1)
(5)
(6)

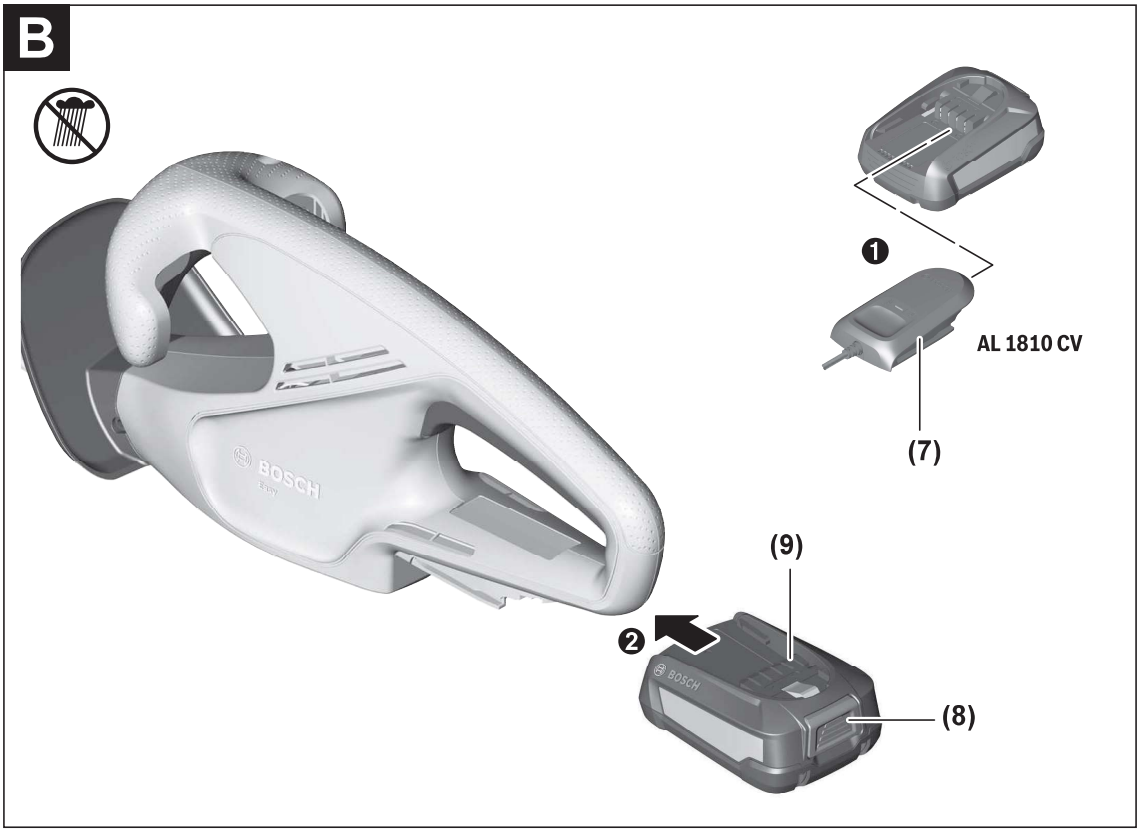
B
❶
AL 1810 CV
(7)
(9)
❷
(8)

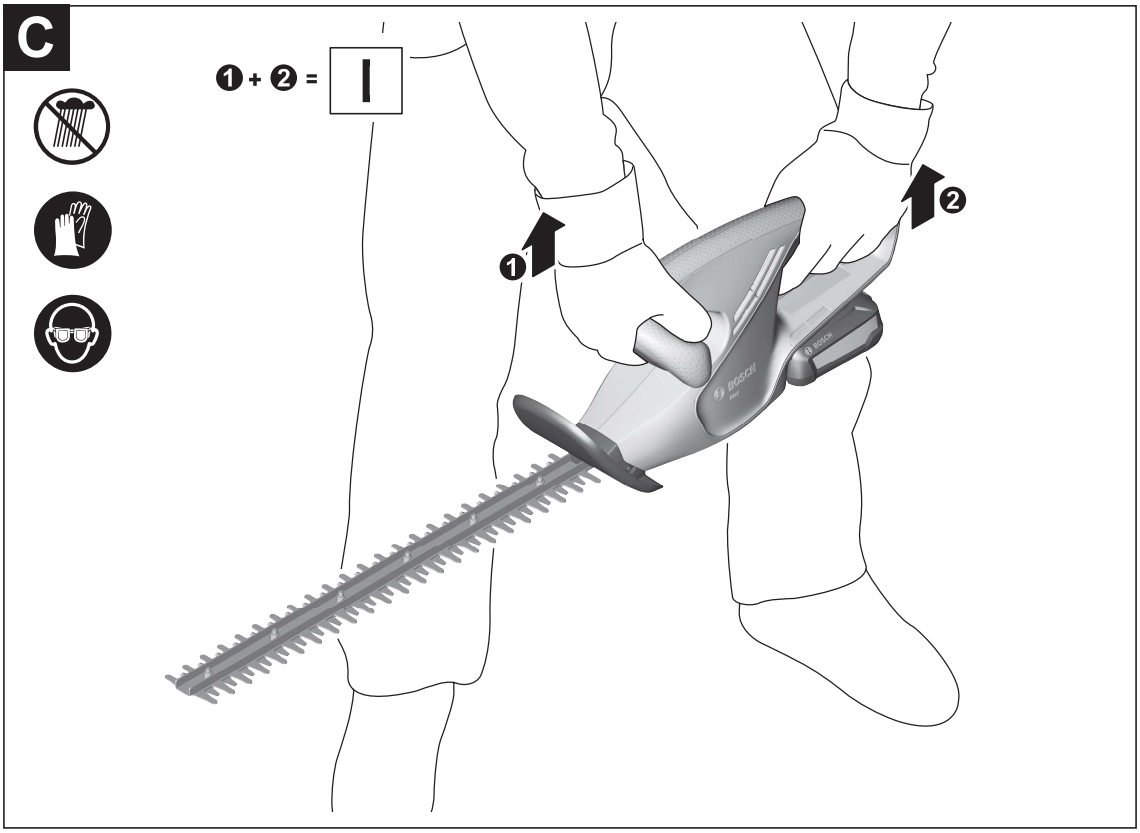
C
❶ + ❷ =
❶
❷

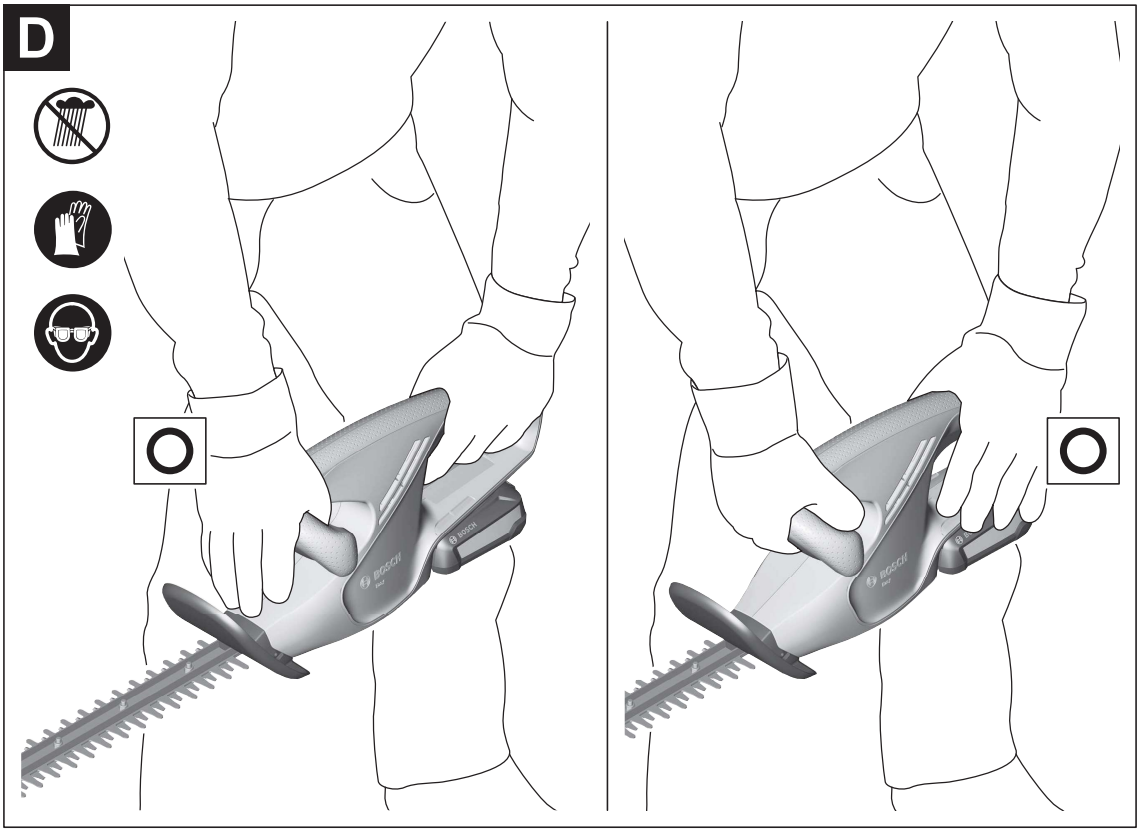
D

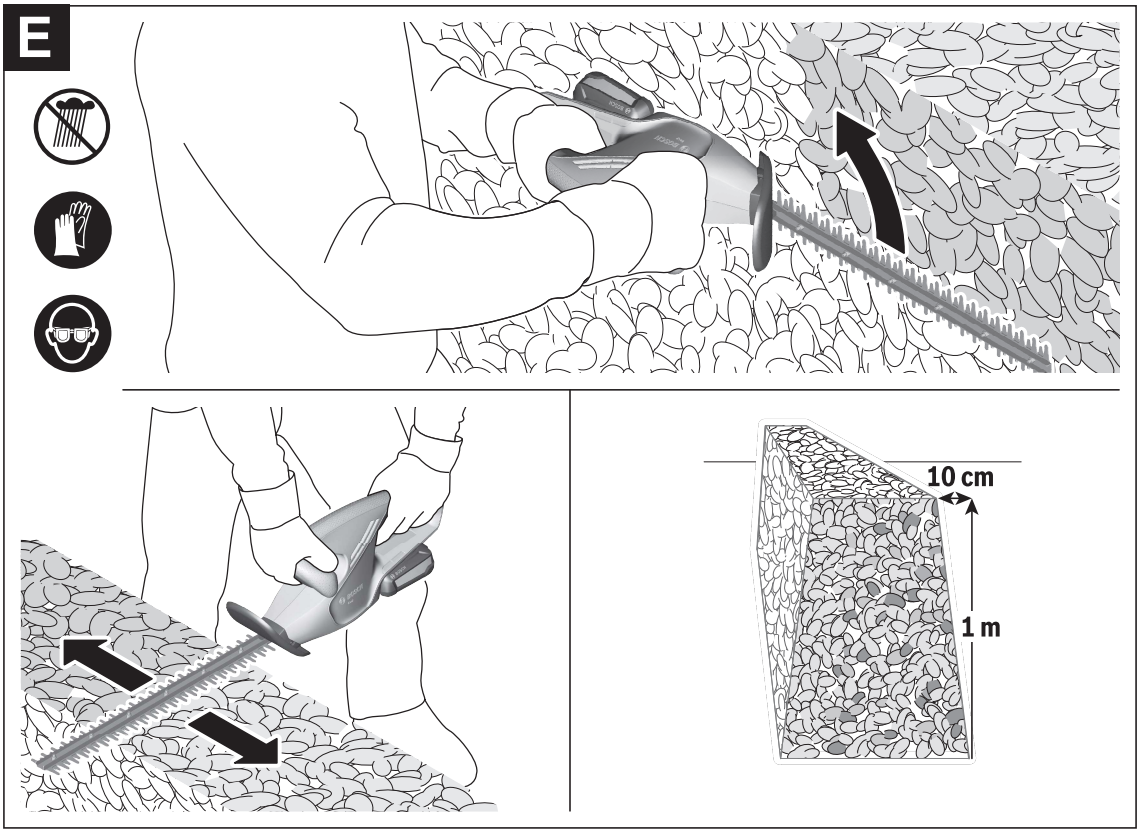
E
10 cm
1 m

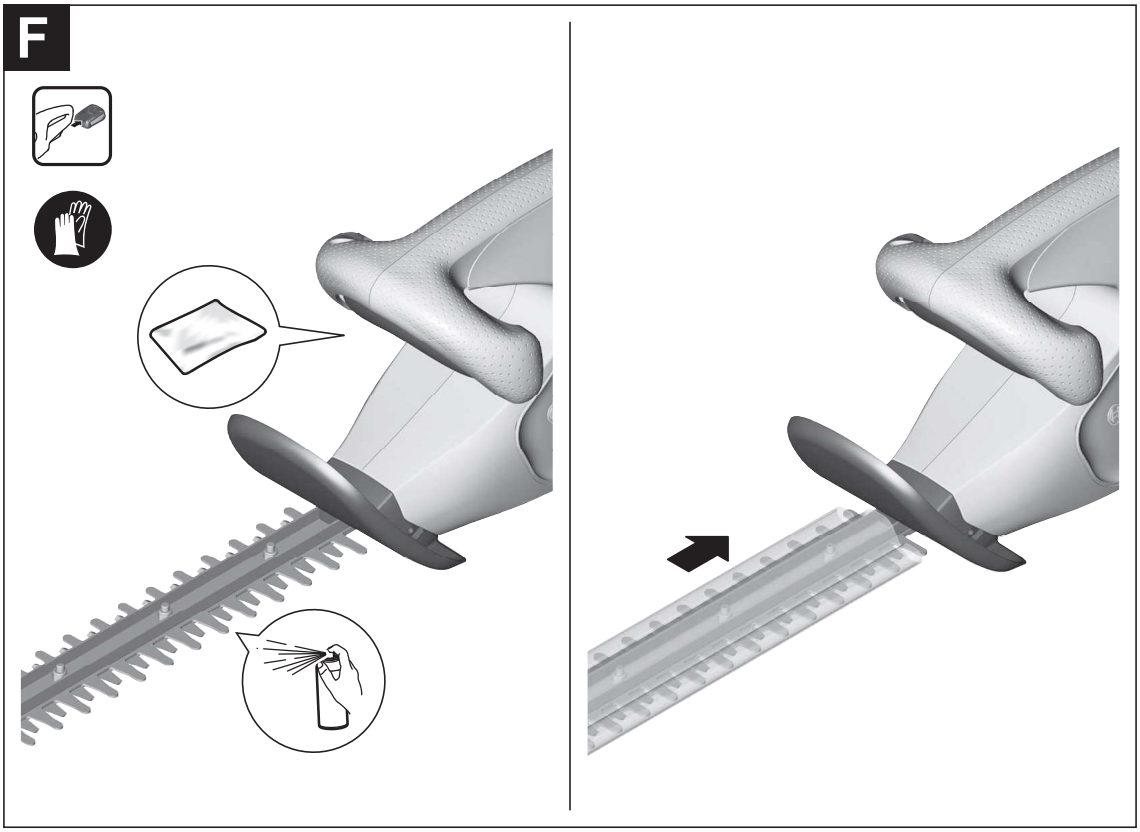
F

G

1 609 200 399

F 016 800 178

F 016 800 292
F 016 800 314

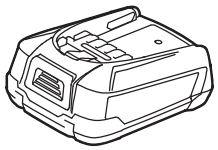

18vLI 1.5 Ah
2 607 337 187 (EU)

18 V LI 2,5 Ah
1 600 A00 5B0 (EU)

18 V LI 3,0 Ah
1 607 A35 01M (EU)

18 V LI 4,0 Ah **A)**
1 600 A01 1T8 (EU)

18 V LI 6,0 Ah **A)**
1 600 A00 DD7 (EU)

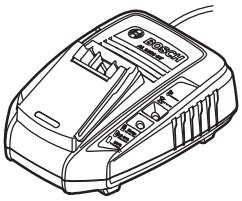

AL 1830 CV
1 600 A00 5B3 (EU)
1 600 A00 5B4 (UK)
1 600 A00 5B5 (AUS)

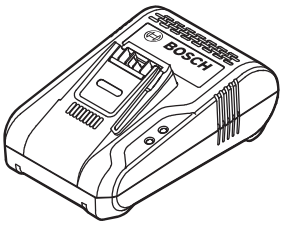

AL 1880 CV
1 600 A01 1TZ (EU)
1 600 A01 1U0 (UK)

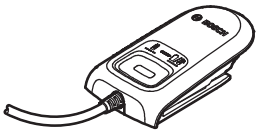

AL 1810 CV
2 607 226 385 (EU)
2 607 226 387 (UK)